WIRING DIAGRAM

EVAstream 700

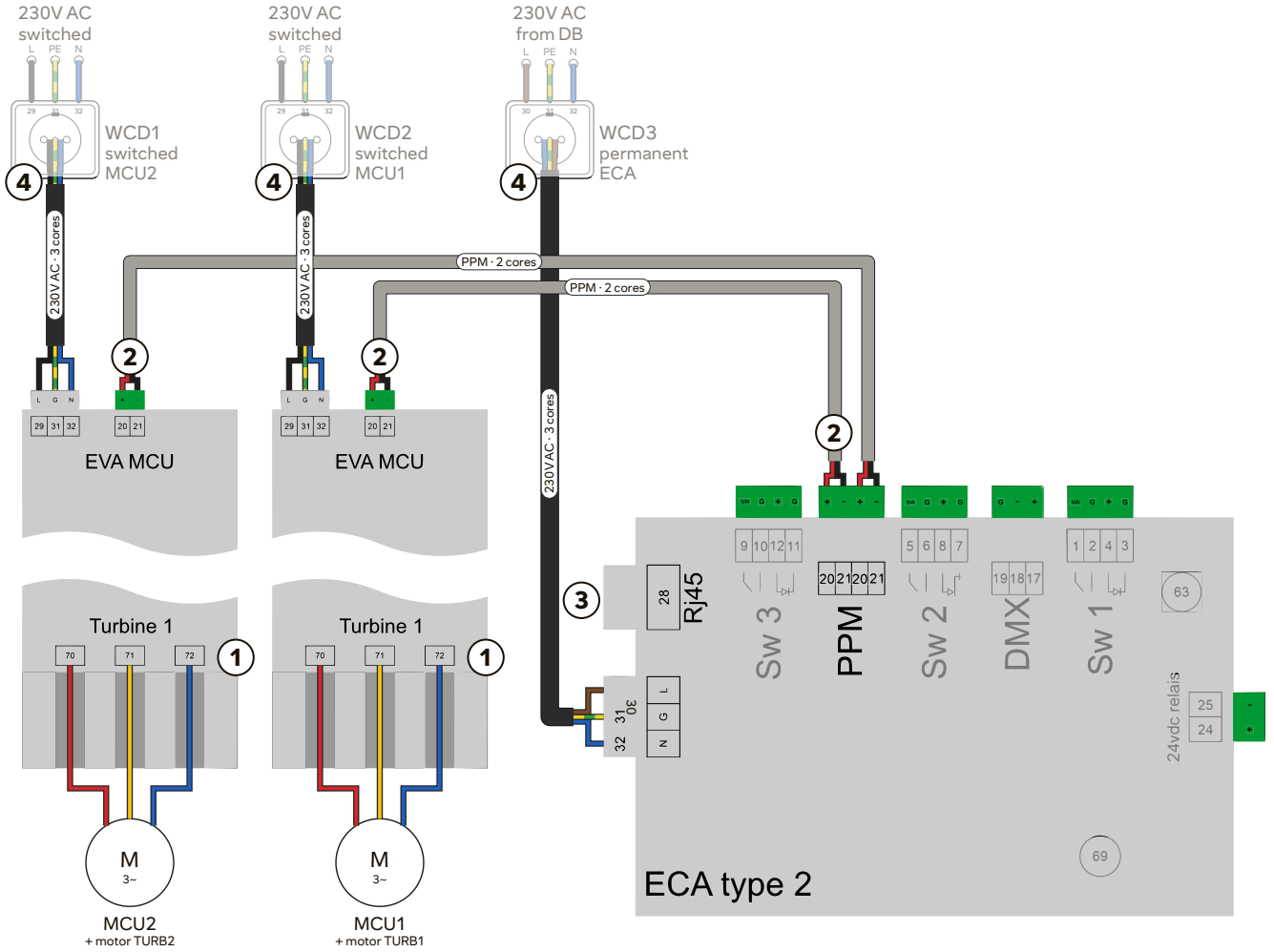

1 Turbine → EVA MCU	2 PPM cable: EVA MCU → ECA	3 Network: ECA → router	4 Power: connect last
70 U red	20 + red	28 LAN	30 L brown · ECA (always on)
71 V yellow	21 – black		29 L black · MCU (switched)
72 W blue			32 N blue
			31 G green-yellow · earth

Specifications subject to change. © EVA Tech B.V. 2027 | V27.1