WIRING DIAGRAM

EVA Piezo

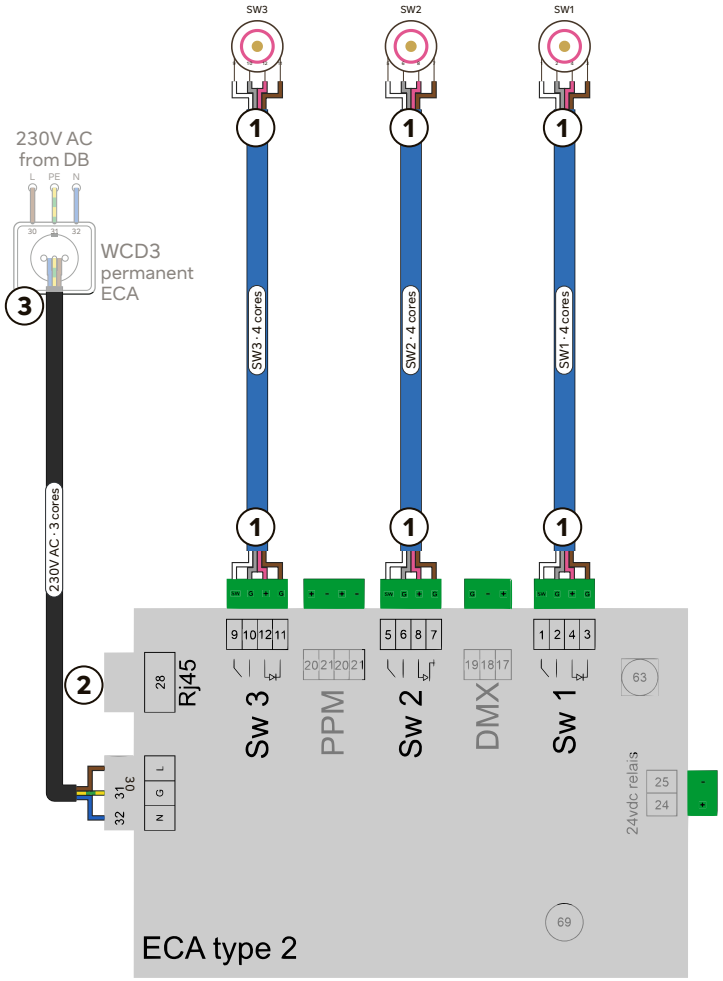

1 EVA Piezo (4 cores)

		SW1	SW2	SW3		
○	white	1	5	9	S	contact
●	grey	2	6	10	G	
●	brown	3	7	11	G	
●●●		4	8	12	+	LED ring

LED ring colour: connect the pink, yellow or green wire to 4/8/12.

2 Network (RJ45)

- 28 LAN

3 230V AC

- 30 L brown · permanent
- 32 N blue
- 31 G green-yellow · earth

Specifications subject to change. © EVA Tech B.V. 2027 | V27.1